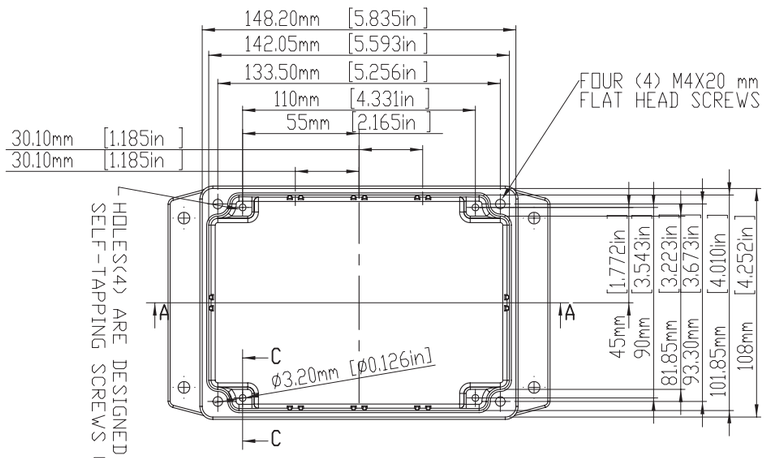

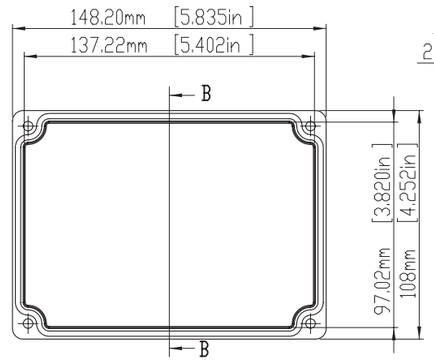

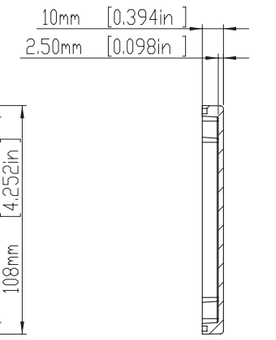

SECTION B-B

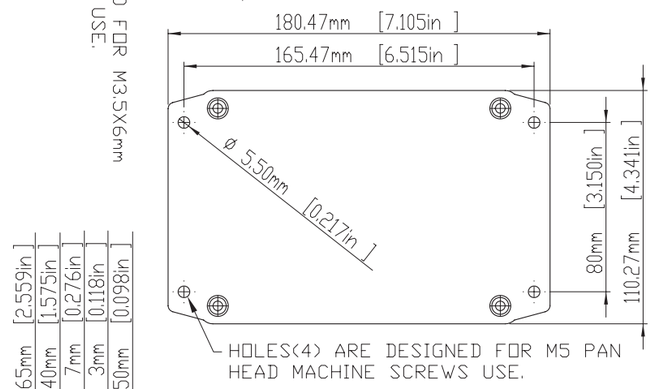

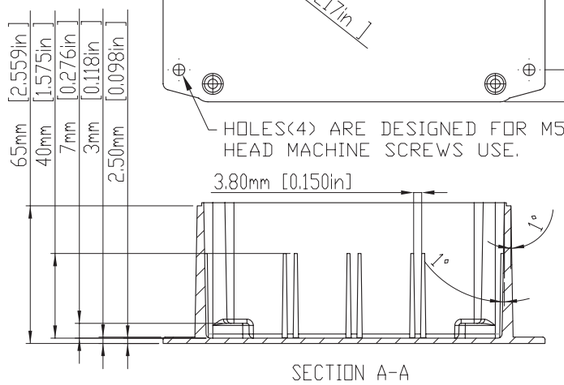

SECTION A-A

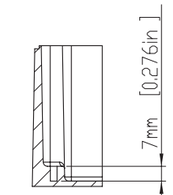

SECTION C-C

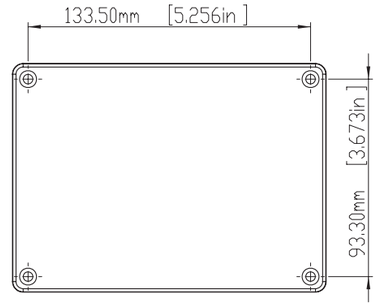

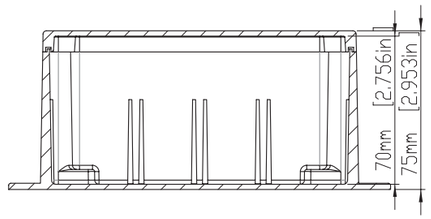

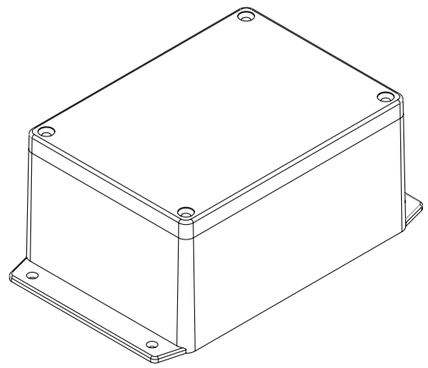

RICHARD WÖHR® GMBH
Gräfenau 58-60
D-75339 Höfen / Enz
Telefon (07081) 9540-0
Telefax (07081) 9540-90
Richard@WoehrGmbh.de
www.WoehrGmbh.de

Expression:
Industrial enclosure

Order code:
GH02AL001/560

Dim. in inch